Beretta
Model 92 Double Action Pistol

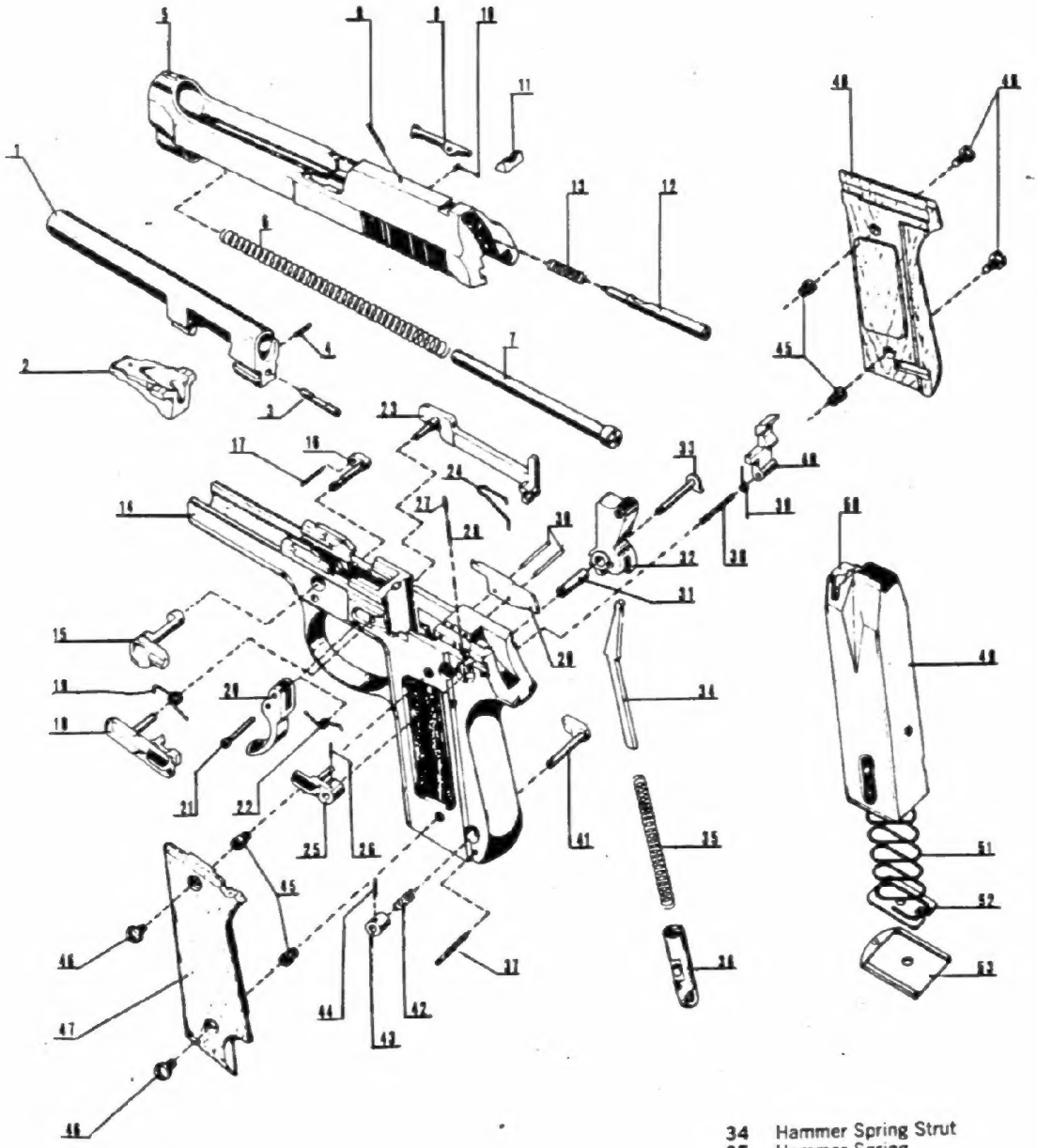

1 Barrel
2 Locking Block
3 Locking Block Plunger
4 Locking Block Plunger Pin
5 Slide
6 Recoil Spring
7 Recoil Spring Guide
8 Extractor
9 Extractor Pin
10 Extractor Spring
11 Rear Sight
12 Firing Pin
13 Firing Pin Spring
14 Frame
15 Takedown Latch
16 Takedown Latch Release Button
17 Takedown Latch Release Spring
18 Slide Catch
19 Slide Catch Spring
20 Trigger
21 Trigger Pin
22 Trigger Spring
23 Trigger Bar
24 Trigger Bar Spring
25 Safety
26 Safety Pin
27 Safety Spring Pin
28 Safety Spring
29 Ejector
30 Ejector Pin (2 Pieces)
31 Hammer Bushing
32 Hammer
33 Safety Pin
34 Hammer Spring Strut
35 Hammer Spring
36 Hammer Strut Guide
37 Hammer Strut Guide Pin
38 Sear Pin
39 Sear Spring
40 Sear
41 Magazine Release Button
42 Magazine Release Button Spring
43 Magazine Release Button Bushing
44 Magazine Release Button Pin
45 Grip Bushing (4 Pieces)
46 Grip Screw (4 Pieces)
47 Left Grip Panel
48 Right Grip Panel
49 Magazine Box
50 Magazine Follower
51 Magazine Spring
52 Magazine Plate
53 Magazine Bottom